explaining to a twelve year old the World of Digital and Analog Electronics

Ramon Caguioa and Jun Danganan

Have you ever been in the Digital or Analog World? many "people" live in these worlds and you can learn their strenghts and weaknesses. Know the use and purpose of each person, watch them do what they do best and in the end, learn how to create your own. Personally name them and let others marvel.

ENTER PORTAL!!

Definition of terms commonly used in both digital and analog

VOLTAGE: amount of electricity

CURRENT: movement of voltage from a higher value to a lower value

RESISTOR: devices that lower voltage and slows down current

DIODES: devices that allow current to pass in only one direction (see diagram). Diodes also serve as other devices but as of now, this all you have to know. Examples of diodes are LEDs which light up when current pass through them

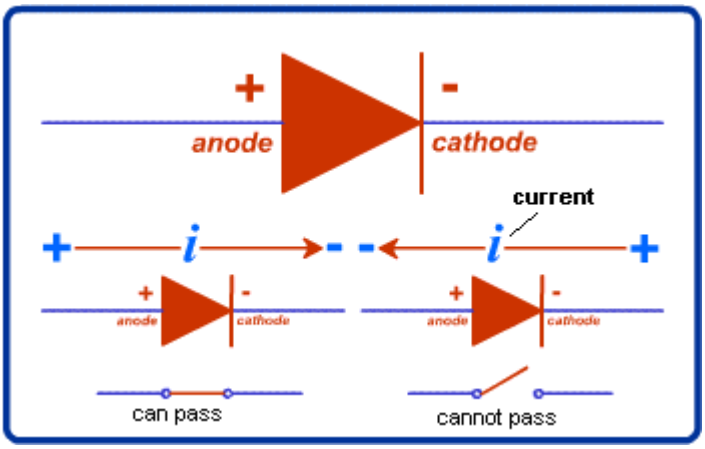

Diagram 1

DIGITAL WORLD

Devices used in the digital world

GATES: a value of one or zero depending on the combination of inputs and type of gate (like a lock).

IC: a number of gates connected with each other, many of type of IC (see diagram 2)

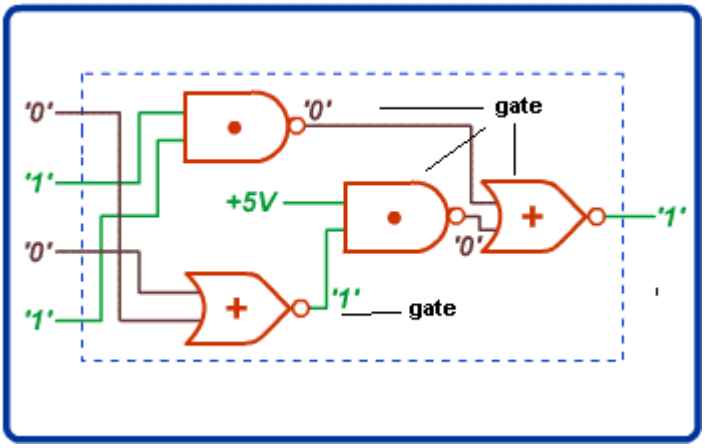

Diagram 2

The digital world is composed of only two states "on" and "off" or 1 and 0 respectively. To better help you understand the digital world, I will explain diagram 3.

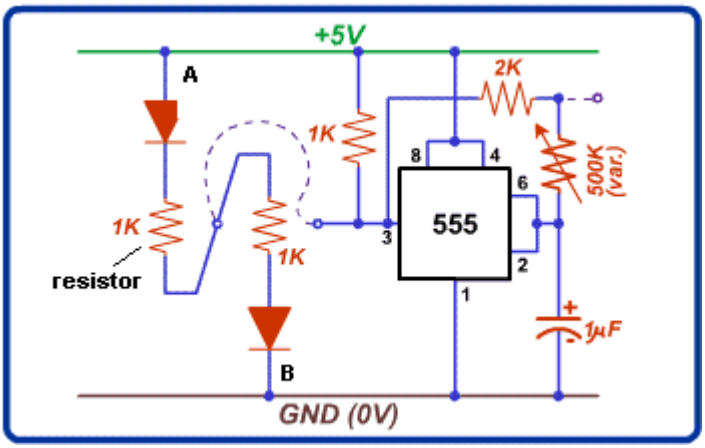

Diagram 3

The main purpose of "the digital world" in diagram 3 is to control current, depending on the state of the IC (555).

Let's begin!!

We first split diagram 3 into two parts, the left and the right. The left is composed of two diodes and two resistors. The right consists of the dotted line and the 555. (Disregard others for now).

The left side:

Looking at the left side we see that current passes from point A to point B. There is one reason for this: the main reason is because point A is connected to a +5 volt while point B is connected to 0 or ground and according to the definition above current moves from a higher voltage value to a lower voltage value. Thus, the LEDs light up because there is current passing from point A to point B. However because of the right side there is a change in the whole diagram.

The right side:

When we connect the dotted lines to the left side there is a change in the diagram. First we must understand how the 555 works. the 555 gives out a a value of of 1 in a certain interval like a clock, tick(1)-tock(0), tick(1)-tock(0). Whenever there is a value of 1 the dotted line is "on" meaning a voltage value of +5 is present in the dotted line, when there is a value of 0 the dotted line is "off" meaning a voltage value of 0 is present in the dotted line.

Combining left and right side:

Whenever, the dotted line has a voltage value of 5 the 1st LED of the diagram is cut or there is no current travelling in the 1st LED simply because +5 = +5 but there is still current passing through the 2nd LED because +5 > 0.

Whenever the dotted line has a voltage value of 0 the 2nd LED of the diagram is cut because 0 = 0 and the 1st LED is lighted. In short, because of the digital component 555 there is alternating light present in the two LED remember tick-tock, tick-tock. This setup is used in Christmas lighting for better effect.

ANALOG WORLD

Devices used in the analog world

OPERATIONAL AMPLIFIER: determines how much it will increase or decrease a voltage source according to your setting.

POTENTIOMETER: allows you to manually decrease or increase the voltage that travels through you circuit. It also serves as a resistor

Many devices in the analog world use operational amplifiers and potentiometers. Such instruments would include speakers or adjustable lightings (dimmer or lighter). With potentiometers you can adjust the brightness of the light so not to hurt your eyes and just by speaking softly, speakers would increase the sound by using operational amplifiers.

This is only a glimpse of the world to come, learn, understand and create your own army!!!