click

Today is a Great Day

The DREAM - Imagine a Braille literacy scenario

- a room filled with blind children and adults enjoying themselves
- some reading their English textbooks
- some the Holy Book
- some writing or editing a manuscript for a book
- some learning French or Mandarin on the internet
- some providing distance counseling
- some writing an acceptance speech as a Nobel Prize winner

click

Thank You for Coming!

My Outline

- *what is the system?*
- *is it within the reach of many?*
- *who implements it and how?*
- *how does the system operate?*


EMPOWERMENT
WHITE CANE SAFETY DAY
OCT. 13
ALAKEA
PUSH BUTTON FOR WALK SIGNAL
WHITE CANE SAFETY DA
EMPOWERMENT
FREEDOM

Blindness in adults

Total: 25,200,000

Women: 15,000,000

Men: 10,000,000

Age 18 to 64: 18,700,000

Age 65 and older: 6,500,000

- The World Blind Union (WBU): blind population around the world 285 million people
- Members of WBU are organizations of and for the blind in 190 countries, as well as international organizations working in the field of vision impairment

Texas Legislature

In 1991, House Bill 2277, the “Braille Bill” was passed into law by the Texas State Legislature. One provision of the bill, contained in Chapter 506, states that: “each person assisting in the development of a functionally blind student’s individualized education program shall receive information describing the benefits of Braille instruction.”

Braille instruction benefits students who are functionally blind in the following ways:

- Braille allows reading and writing skills to be developed.
- Because literacy is based on the ability to read and write, Braille is the only media available for obtaining literacy for people who use their tactile sense as the primary means of gathering information.
- Braille allows the student who is functionally blind to have the same “written” materials in the classroom as sighted peers.
- Braille allows for instruction in correct written language usage such as structuring sentences, spelling, formatting paragraphs and editing.
- Braille allows the selection of a book for the pleasure of reading independently at any time or place without additional equipment.

what is the system?

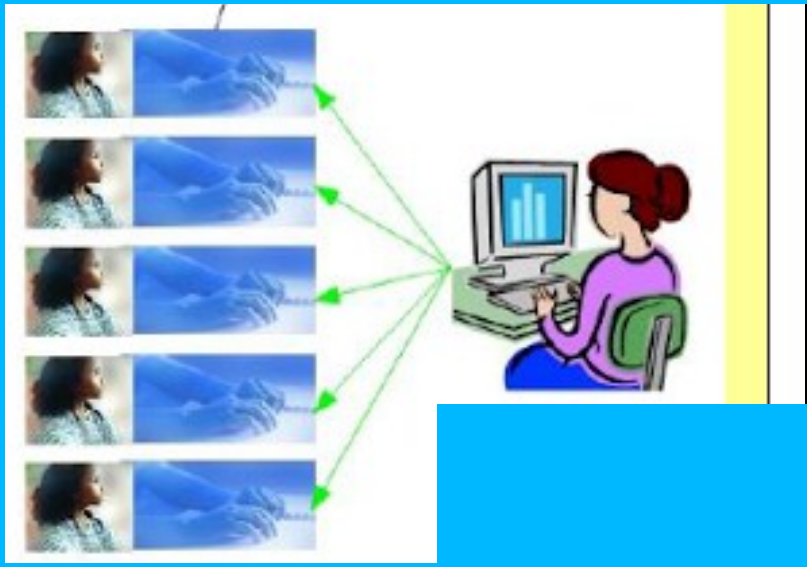

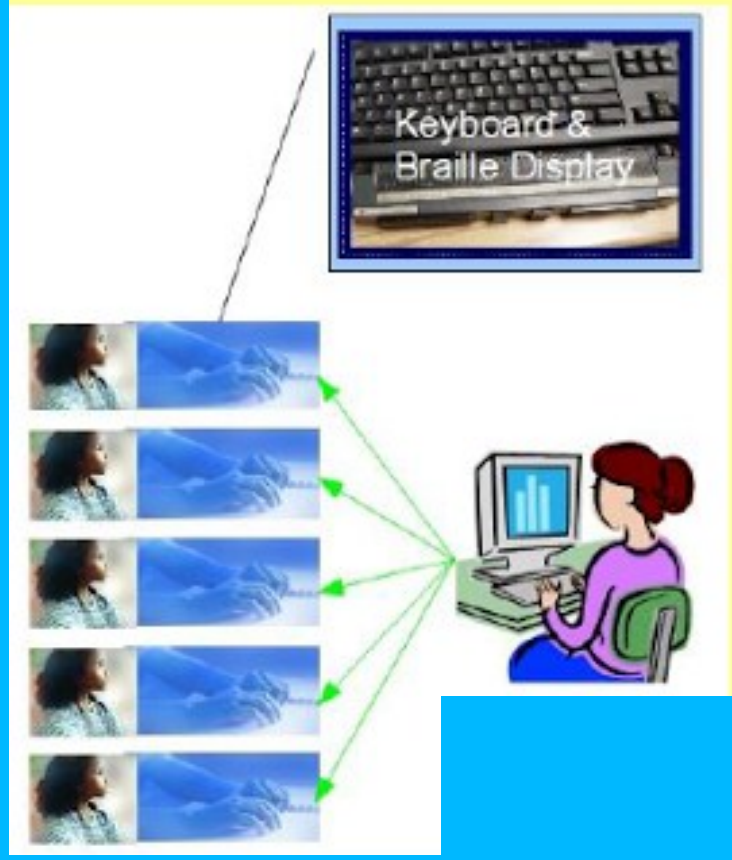
Keyboard &
Braille Display

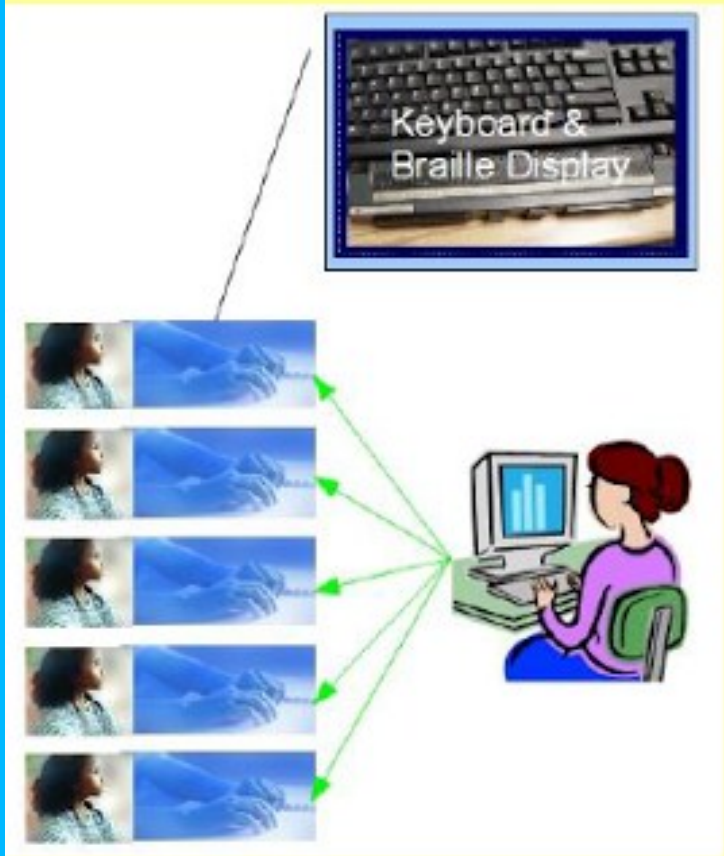

The TOOL - Braille Literacy Classroom
1 PC + 5 Visually Impaired Users
+ 1 Sighted Person/Teacher

Vision

The Braille Literacy TOOL empowers people with visual impairment to enhance their self-sufficiency, take up quality leadership roles in the community, have access to the vast knowledge resource available on the internet, and provide them with the ability to write books, edit manuscripts, and perform tasks that have been almost exclusively for the sighted and the more well-to-do of the visually impaired.

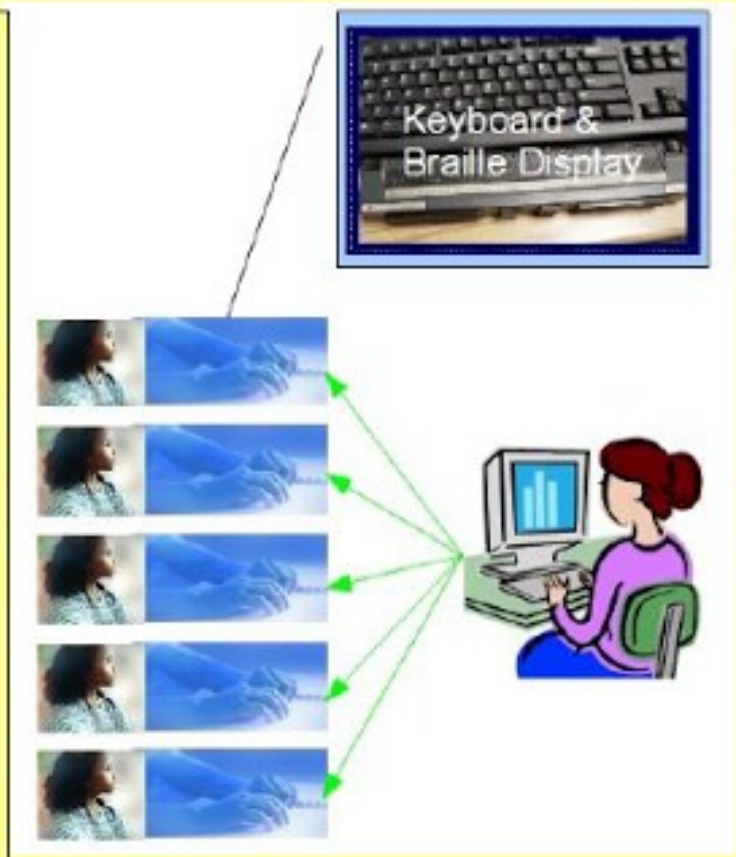

The TOOL - Braille Literacy Classroom
1 PC + 5 Visually Impaired Users
+ 1 Sighted Person/Teacher

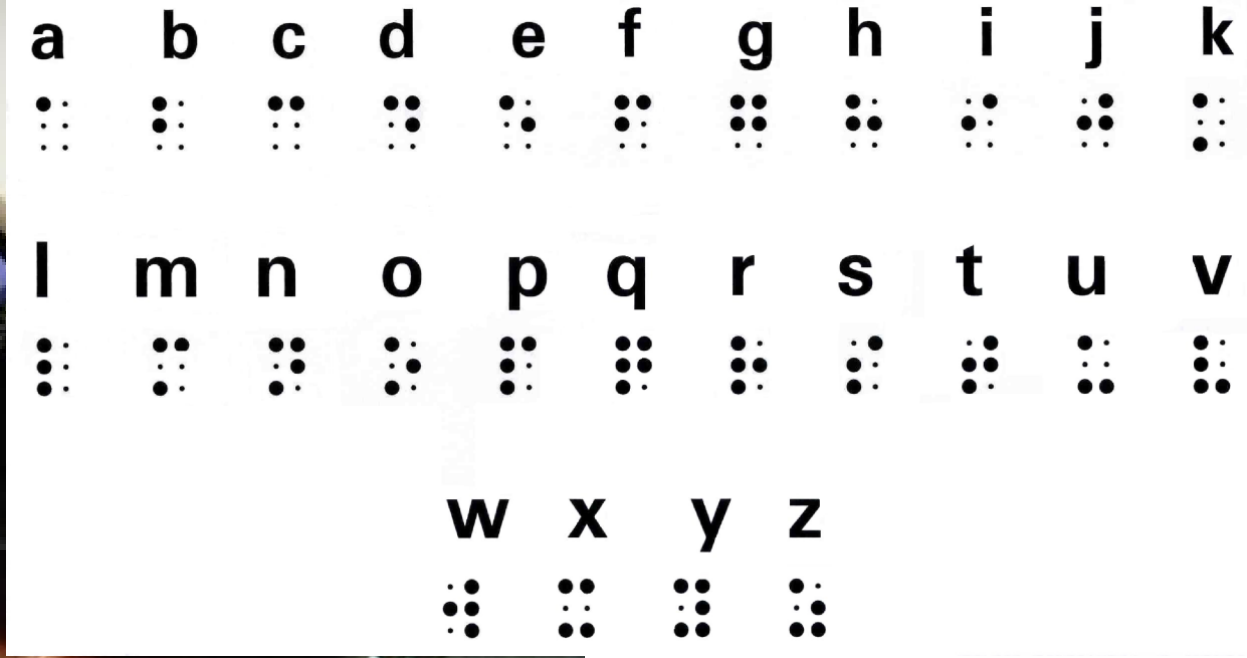
a b c d e f g h i j k
l m n o p q r s t u v
w x y z

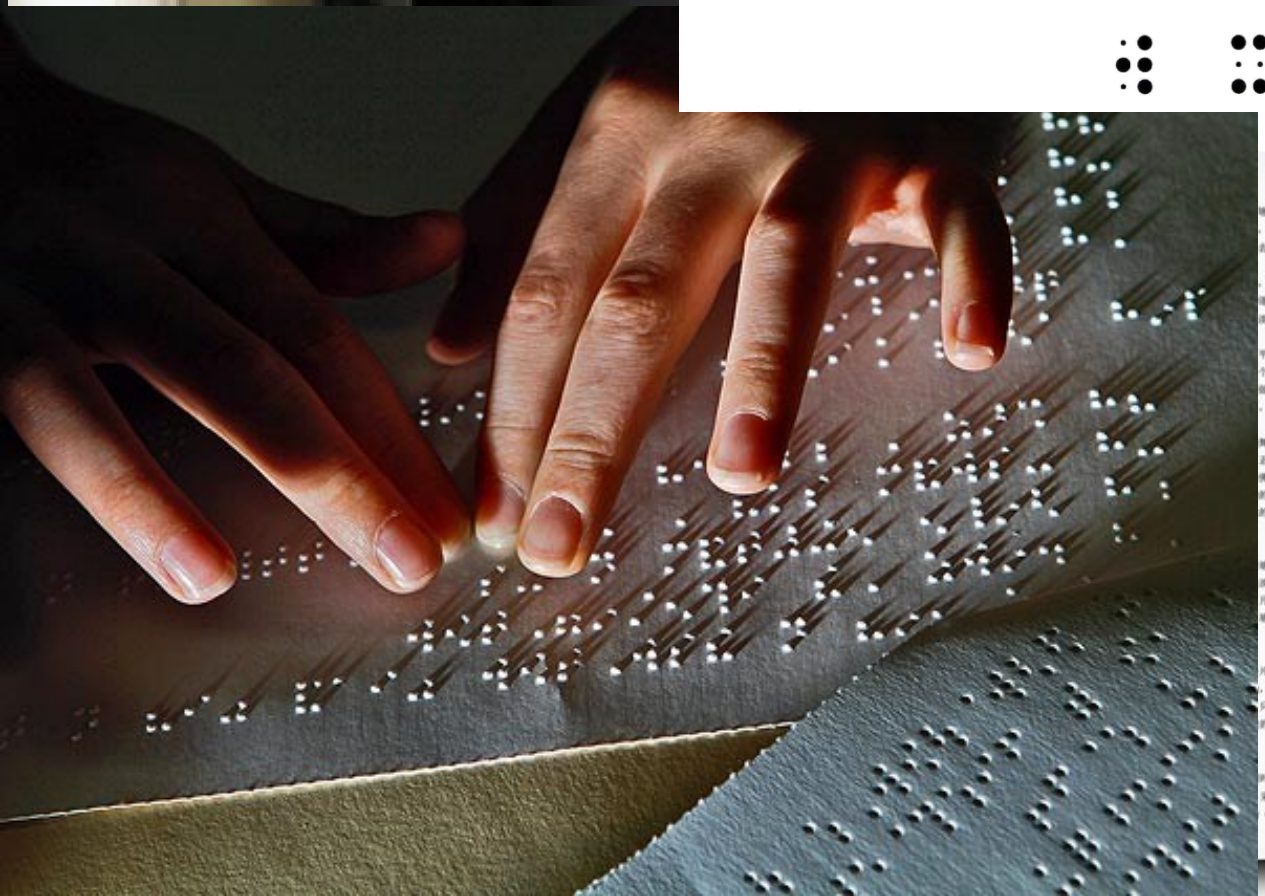

click

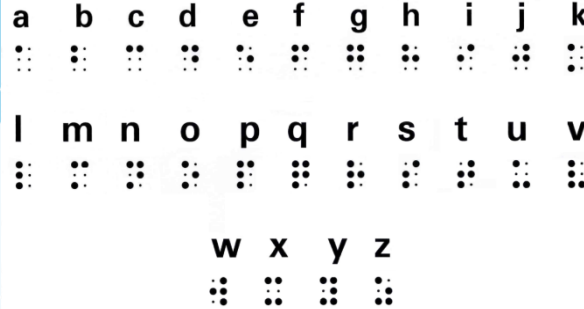

“Translation for an average 10 paged Word document would result in 25 to 30 Braille pages. Costs would run $150 to $180 for the master transcription and $13 to $16 for each Braille copy thereafter. The timeframe for turn around is 7 to 10 working days. The large print version of a document of this type would have a similar master and copy as well as turn around time for production."

(Source: Ontario Ministry of Community and Social Services, "Quick Reference Guide to Accessible Campaign Information and Communication", http://www.mcss.gov.on.ca/en/mcss/publications/accessibility/informationAndCommunication/budgeting.aspx)

click

- The Braille Classroom - Stage 1

Braille Pins & Opening Files

2004 - Abueva & Suamen

click

- The Braille Classroom - Stage 2

Edit/Save Text Files & Access Internet

2006 - Flores & Pelecio

click

- The Braille Classroom - Stage 3

Multiplexed Display & Keyboard | Ultrasonic Sensors for Navigation

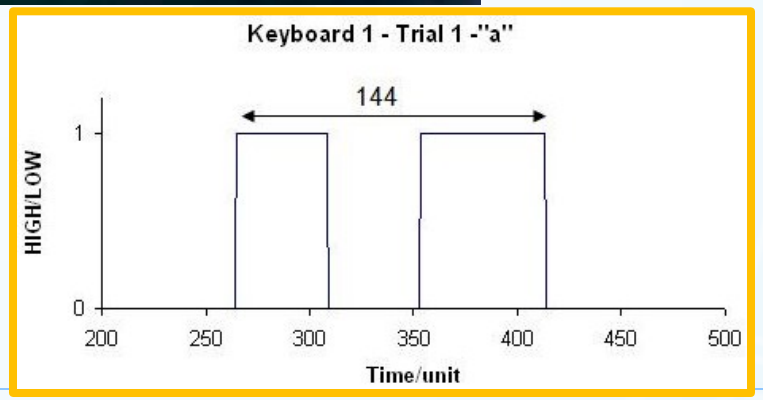

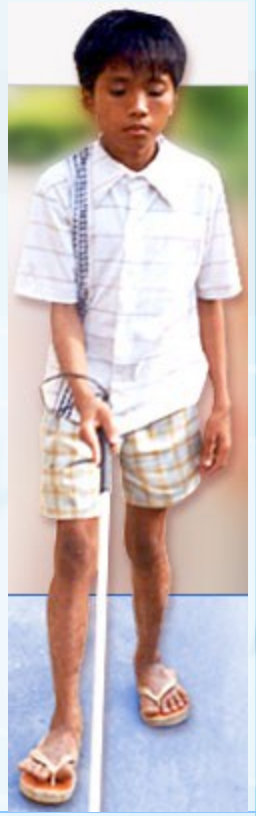

2007 - Pacot, Palileo, Sabulao, Semblante

click

- The Braille Classroom - Stage 4

5-Terminal, One PC

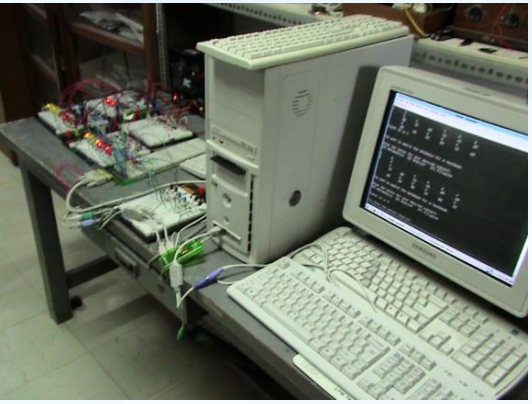

2008 - Domingo, Pasion, Ramos, Tan

click

- The Braille Literacy Classroom

2008 - Domingo, Pasion, Ramos, Tan
5-Terminal, One PC

2007 - Pacot, Palileo, Sabulao, Semblante
Multiplexed Display & Keyboard &
Ultrasonic Sensors for Navigation

2006 - Flores & Pelecio
Edit/Save Text Files & Access Internet

2004 - Abueva & Suamen
Braille Pins & Opening Files

click

Ateneo Interfaces for the Blind Project

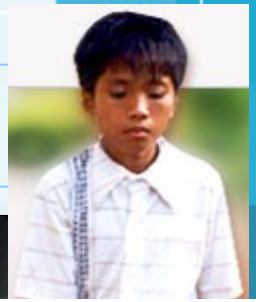

Project's V I S I O N

- technological support for
  - the literacy aspirations of the blind & communities of the blind
  - textbooks, resources on the internet, bible, etc.
  - navigational aid

- affordable
  - h/w- lower-end PC's, local components & fabrication
  - s/w- free Operating System & local development

Braille Standards

- Various Braille standards have been developed and switching from one to another requires considerable experience in each.
- This TOOL will "translate" the Braille into a standard of choice!
- All that the user needs to do is ACTIVATE a software SWITCH, and in many cases, voila!
- The Braille system will behave according to what the user's preferences. For example, a user who wants to use the Nemeth Code will simply activate the software switch for that standard. The same goes one who prefers Gardner-Salinas, or Unicode Braille Patterns (coding is in accordance with ISO/TR 11548-1 Communication aids for blind persons), or BANA.

is it within the reach of many?

By DESIGN

Project will use only "low-level" technology, requiring minimal hardware and software resources

- ✓ Electrical Schematic Diagrams use "off-the-shelf" hardware
- ✓ SYSTEM can be easily fabricated by anyone
- ✓ Using TTL's (Transistor-Transistor Logic), discrete bi-polar transistors, and wires, solders and nails
- ✓ All hardware components are available from component stores in developed and in developing economies.
- ✓ The Hardware could be fabricated from "scratch"
- ✓ A "logic probe" that they themselves could build out of a combination of "NE555 timers" and 7400 series chips, would replace an "oscilloscope"

By DESIGN

- ✓ The software system is written in "C-language", using simple routines that could run on mid-range Personal Computers.
- ✓ the Driver Software is written in simple C-language routines, for intermediate-level programming skills
- ✓ the Operating System is FREE and needs minimal computer resources to operate
- ✓ mid-range Personal Computers have been chosen to make a low-cost and affordable system
- ✓ Both the Software and Hardware systems could be maintained by intermediate-level programmers and technicians.

The Niche – Open Source

- **1PC-TO-5Blind-AND-1Sighted *VS* 1PC-to-1Blind**
- **Writing, Editing, and Publishing**. Each of up to five blind users have their own respective keyboards
- **Internet**. Access to the internet is a growth-laden and liberating
- **The Vector Linux operating system is free. So is the text-based browser, Lynx.**
- **The circuit schematic diagrams are free. So are the Interface and Command software.**
- **Ease of Fabrication**. Option to build the system using prototyping breadboards or PCB's

The Niche – Open Source

Inexpensive Construction of Braille Pins.

In the prototype

- the Braille pins were soft-iron wires inside a cylindrical plastic tube
- coil wire of 300 turns is wound around this cylinder
- metal cased 2N2907 configured as an emitter-follower energizes coil to produce a magnetic field
- soft-iron wire is elevated and is felt by the fingers
- coil for the future - formed with much smaller wires, with more number of turns so that sufficient magnetism "NI", or "ampere-turns" generates enough force to lift a much smaller soft-iron wire

click

JOBS for the handicapped

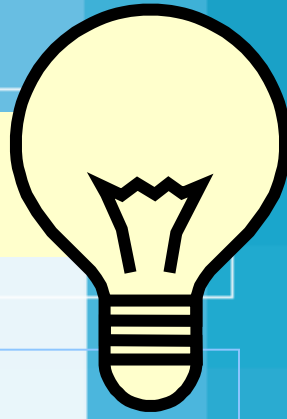

Affordability

- software - handicapped & deaf
- fabrication - handicapped & deaf
- hardware - inexpensive PC's
- operating system - FREE & open source

Replicating

- anywhere there is interest
- immediate assistance and benefit

who implements it and how?

The Foundation

To fund this FREE "Open Source" service, one could:

- Set-up a Foundation and solicit "Grants" for its continued operation.
- The Foundation will employ members of communities of the visually impaired and of the handicapped to make and sell the product to those who neither have the skill, nor the desire to build it themselves.
- Anyone who will build and sell it for profit contributes a specific percentage of the gross sales to the FOUNDATION.

Ancillary benefits to the FOUNDATION

Lead the way in its affordable Braille Literacy Program!

- integrating the internet into the every pedagogy

  A study of Shakespeare might also include a search of commentaries by authors and by the reading public

- Anything that is encoded in a text file can be read in a refreshable Braille display!

  Images of text like Fax messages, could be converted into text via an optical recognition system (OCR). And affordable at that!

- The members of the FOUNDATION might decide to take up the challenge of re-writing and customizing the software, opening up a new set of job opportunities

  And they could even accept software development engagements.

Kiosks and Community Reading Centers

What about:

- setting-up strategically located "Kiosks“?
- reading stations at "Talking Book Libraries"?
- What about setting them up at Community Centers of the Blind?

how does the system operate?

Technical Description of the Tool

Get one inexpensive mid-range Personal Computer

- Attach one add-on hardware box to its printer port (easily fabricated, with simple design)
- Connect 5 standard keyboards to this hardware
- Connect 5 Braille display readers to partner with each keyboard (simple design using off-the-shelf electrical and hardware items)
- Install a free downloadable operating system with its built-in text-based internet browser (Vector Linux 5 OS with text browser Lynx)
- Install a small program to communicate with the 5 keyboards and the 5 Braille displays (Simple C++-language programs easily maintained by mid-level programmer)

Technical Description of the Tool

Get one inexpensive mid-range Personal Computer

- Results - one inexpensive PC serving 5 visually impaired users, PLUS one sighted person using his own keyboard and monitor. (A total of 6 persons on one inexpensive PC)
- Configure 10 of these PC's in a network - and you have a system serving a community of 10*5=50 visually impaired and 10 sighted persons
- Teach the fabrication and programming to other persons with disability - and you have enlarged the job market for those others, who usually have less access to jobs
- Area of Innovation: inexpensive and easily replicable, using lower technology PC's

click

Single-PC, multiple-terminal Braille Display

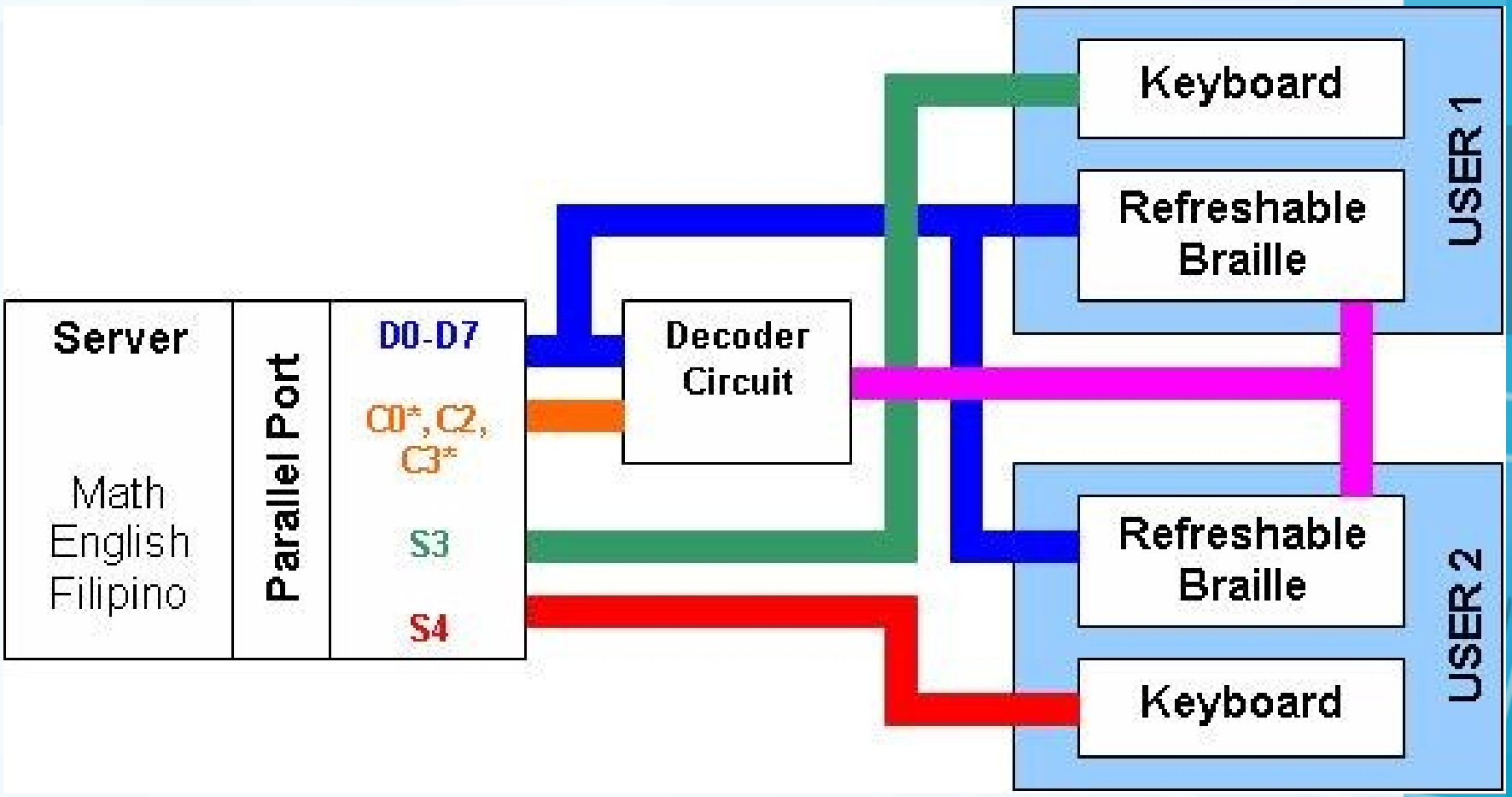

Single-PC, multiple-terminal Braille Display

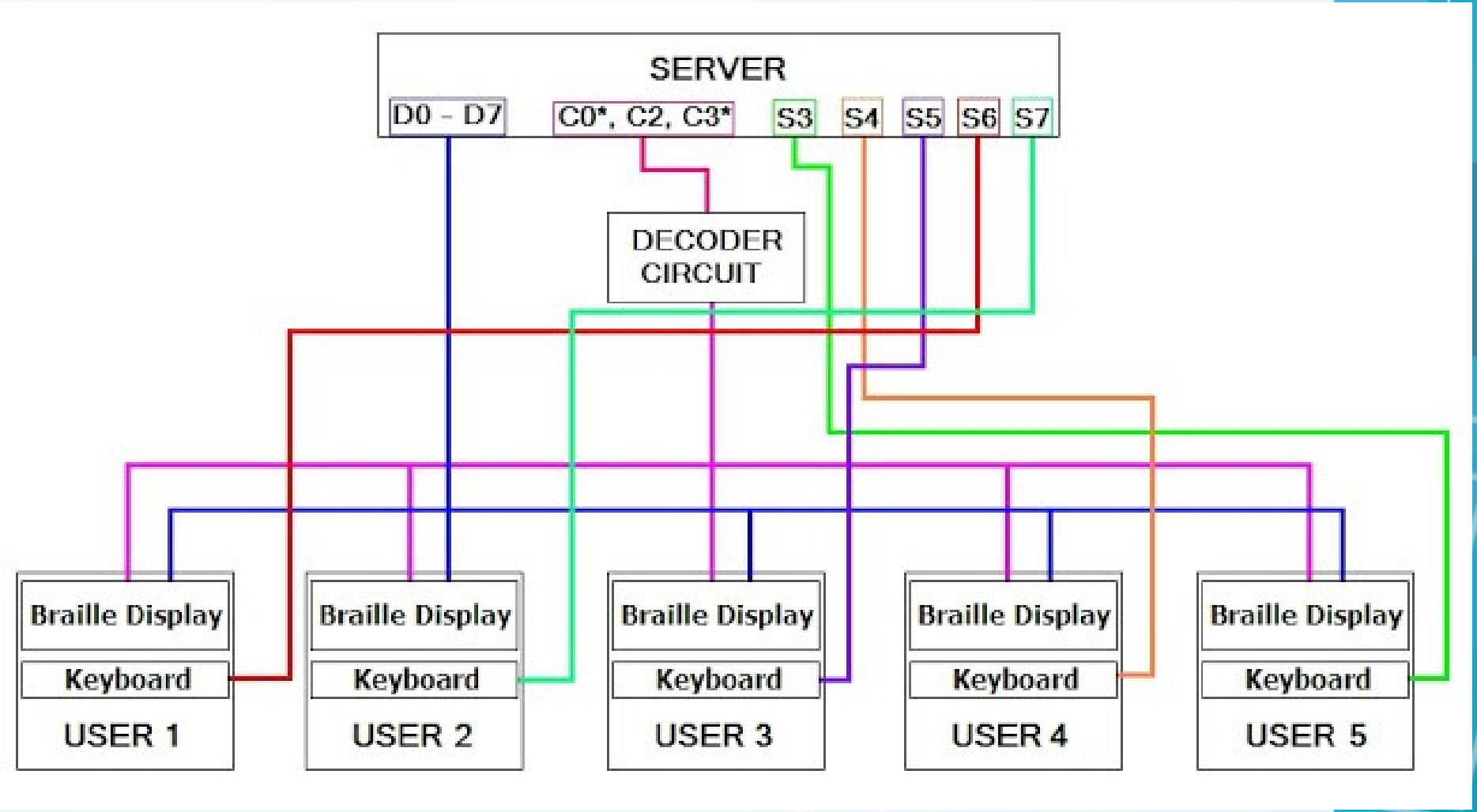

Step-by-Step

1) read port 379 ➔ a) store this in memory
2) analyze five status bits ➔ a) calculate state duration ratio of one bit
3) look-up a table to find the key pressed
4) interpret the meaning of the key pressed
5) perform the specified function within the PC
6) translate the information by looking-up a table for the Braille code combination to be sent to the user
7) send an address command to route the instruction to the specified user
8) send the Braille code combination to the user, at the given address
9) pulse the latch-enable pin to transfer the code at address
10) go back #2a) above for the next user
11) do this five times and go back to #1

Translate to Braille

a ==> 0x61 ==> 0x10

b ==> 0x62 ==> 0x30

c ==> 0x63 ==> 0x11

d ==> 0x64 ==> 0x12

. . . . .

v ==> 0x76 ==> 0x74

z ==> 0x7A ==> 0x56

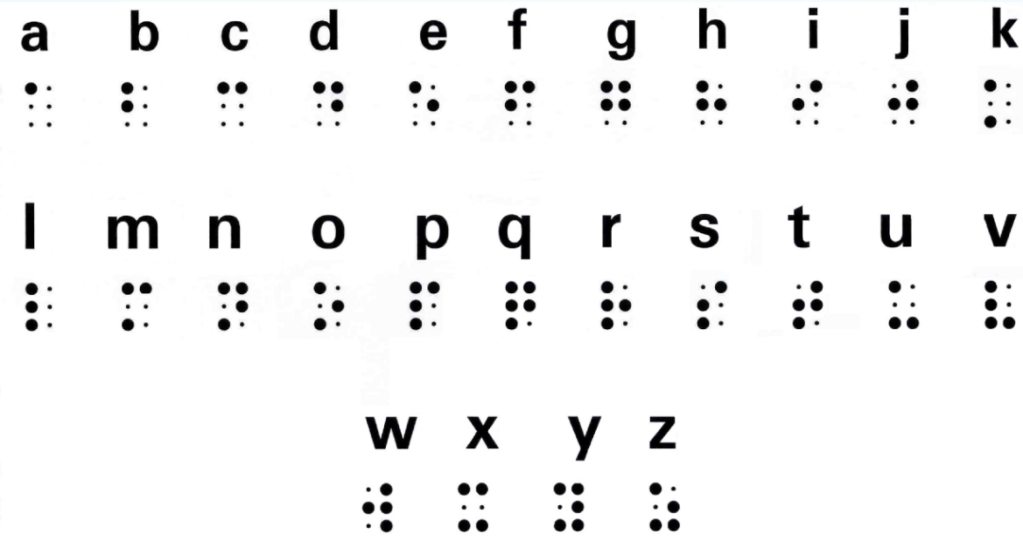

	0	1	2	3	4	5	6	7
0	NUL	DLE	space	0	@	P	`	p
1	SOH	DC1 XON	!	1	A	Q	a	q
2	STX	DC2	"	2	B	R	b	r
3	ETX	DC3 XOFF	#	3	C	S	c	s
4	EOT	DC4	$	4	D	T	d	t
5	ENQ	NAK	%	5	E	U	e	u
6	ACK	SYN	&	6	F	V	f	v
7	BEL	ETB	'	7	G	W	g	w
8	BS	CAN	(	8	H	X	h	x
9	HT	EM	)	9	I	Y	i	y
A	LF	SUB	*	:	J	Z	j	z
B	VT	ESC	+	;	K	[	k	{
C	FF	FS	,	<	L	\	l	|
D	CR	GS	-	=	M	]	m	}
E	SO	RS	.	>	N	^	n	~
F	SI	US	/	?	O	_	o	del

Printer Port

Port 378(HEX) is bi-directional. In this project, it is used, exclusively, as an output port in order to accommodate older computers. It also makes the programming simpler, giving room for intermediate-level programmers.

Port 379(HEX) is a status port. Each of the five available status bits monitor one of the five keyboards. The signal from the keyboards are transmitted serially; while the status port receives parallel inputs. In the ordinary run of things, this is not a viable scheme. BUT YES, IT CAN BE DONE! We developed a hardware interface program that configures the five pins of status port to behave like SERIAL INPUT ports. And it WORKS!

Port 37a(HEX) is a complex port, which has an output function, but also controls the behavior of the entire port itself. Care is taken that the program returns all the printer port configurations to their state prior to the program's usage of the port.

Port	Function	Pin	Inv/Non-Inv
378	D0	2	N
	D1	3	N
	D2	4	N
	D3	5	N
	D4	6	N
	D5	7	N
	D6	8	N
	D7	9	N
379	S3	15	N
	S4	13	N
	S5	12	N
	S6	10	N
	S7	11	I
37A	C0	1	I
	C1	14	I
	C2	16	N
	C3	17	I

Single-Step Program

Sample Schematic Diagram

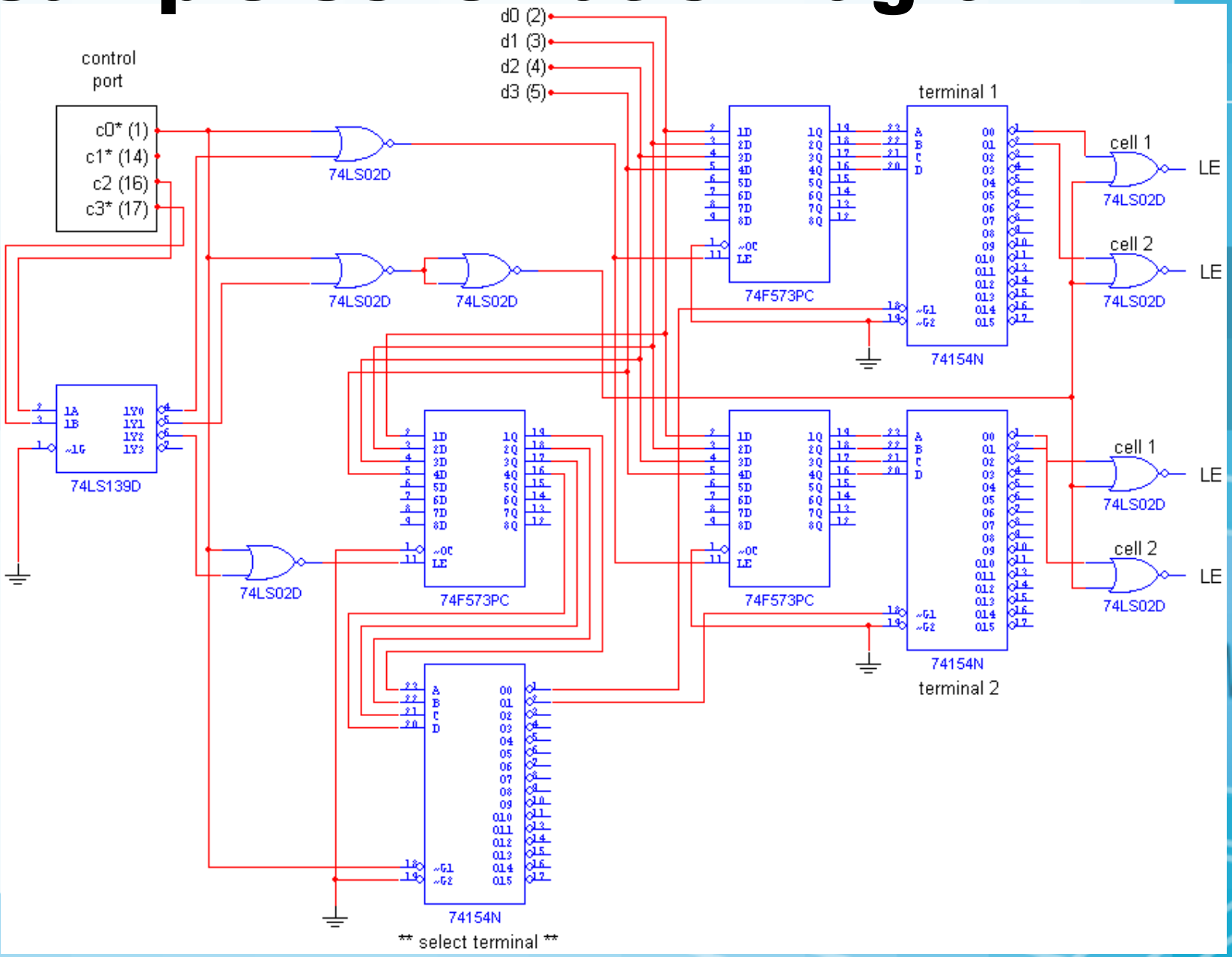

ISO Braille Standard

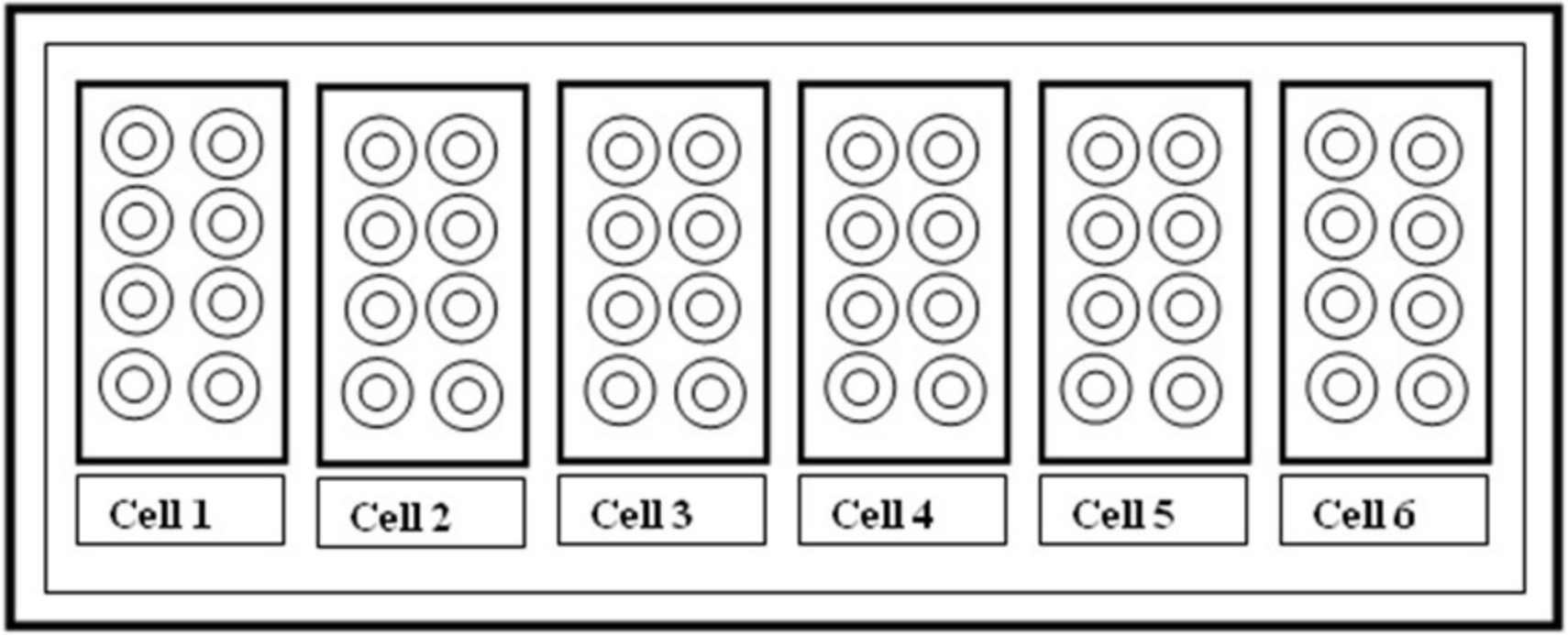

The Braille Pins

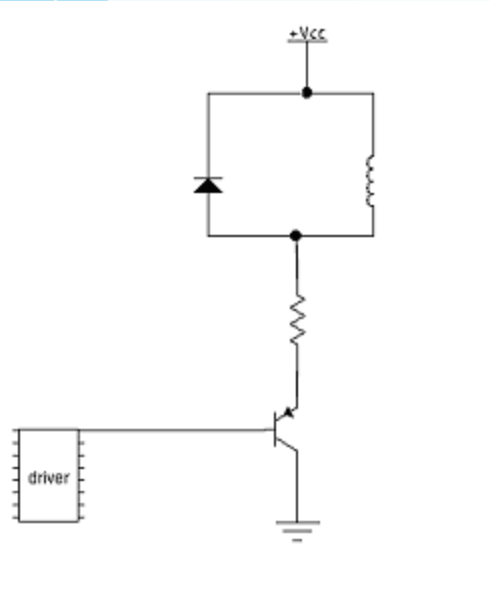

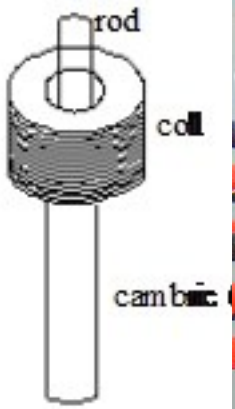

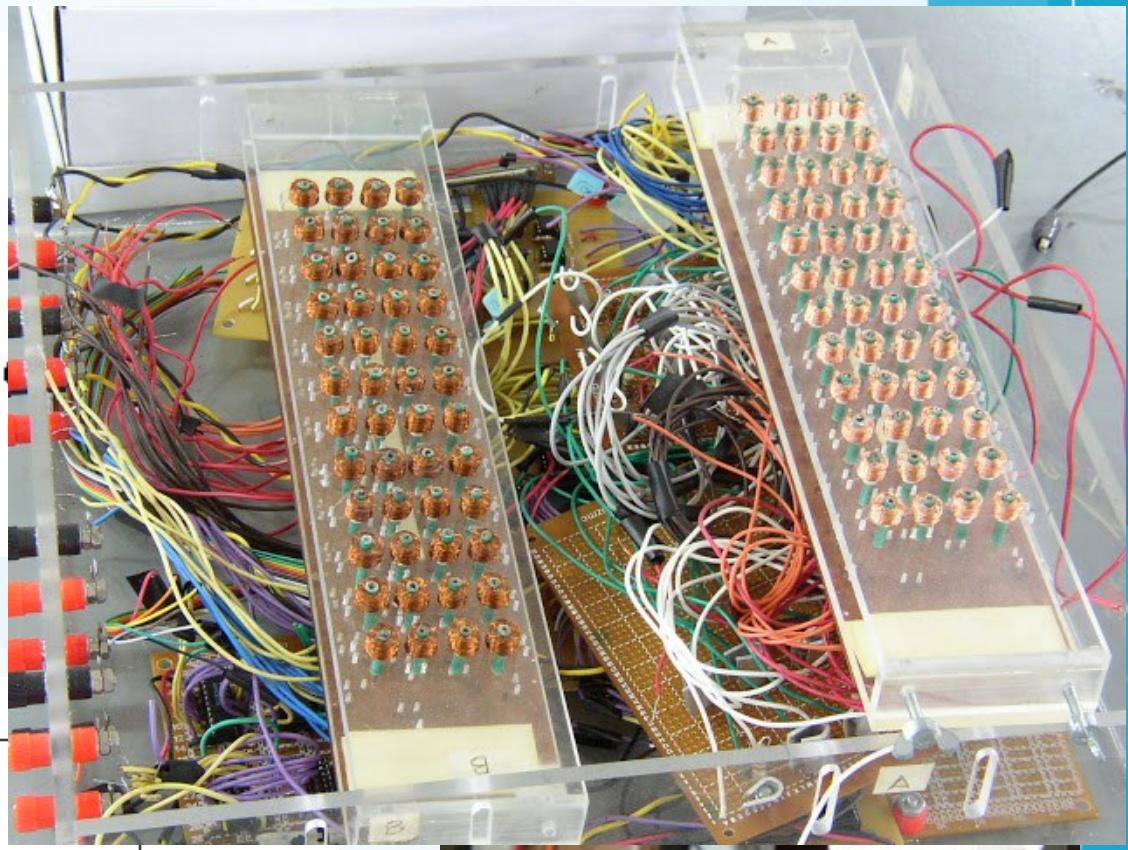

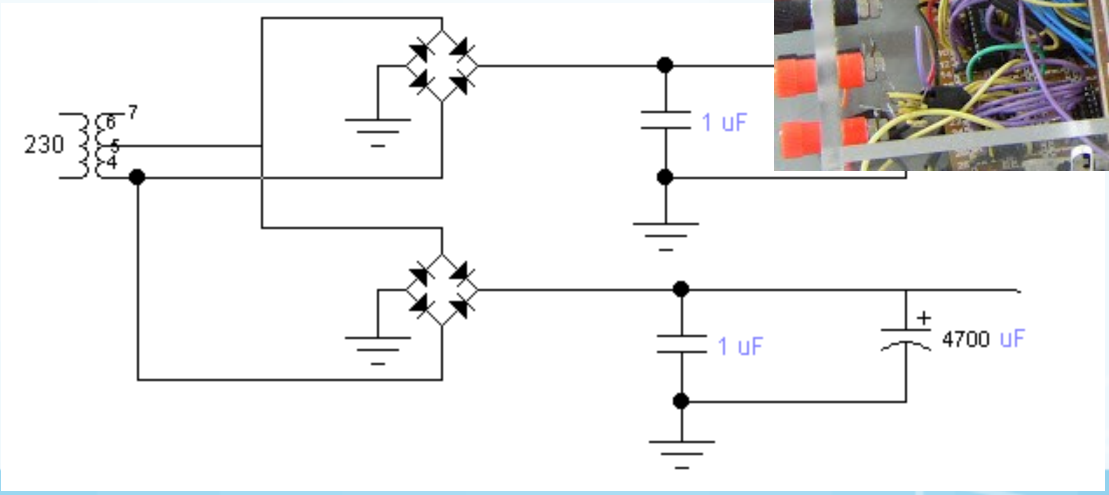

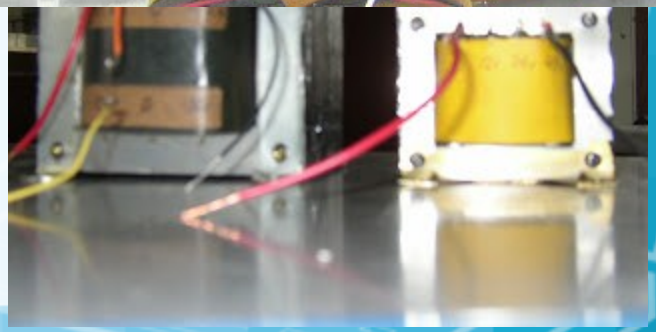

The Braille Pins

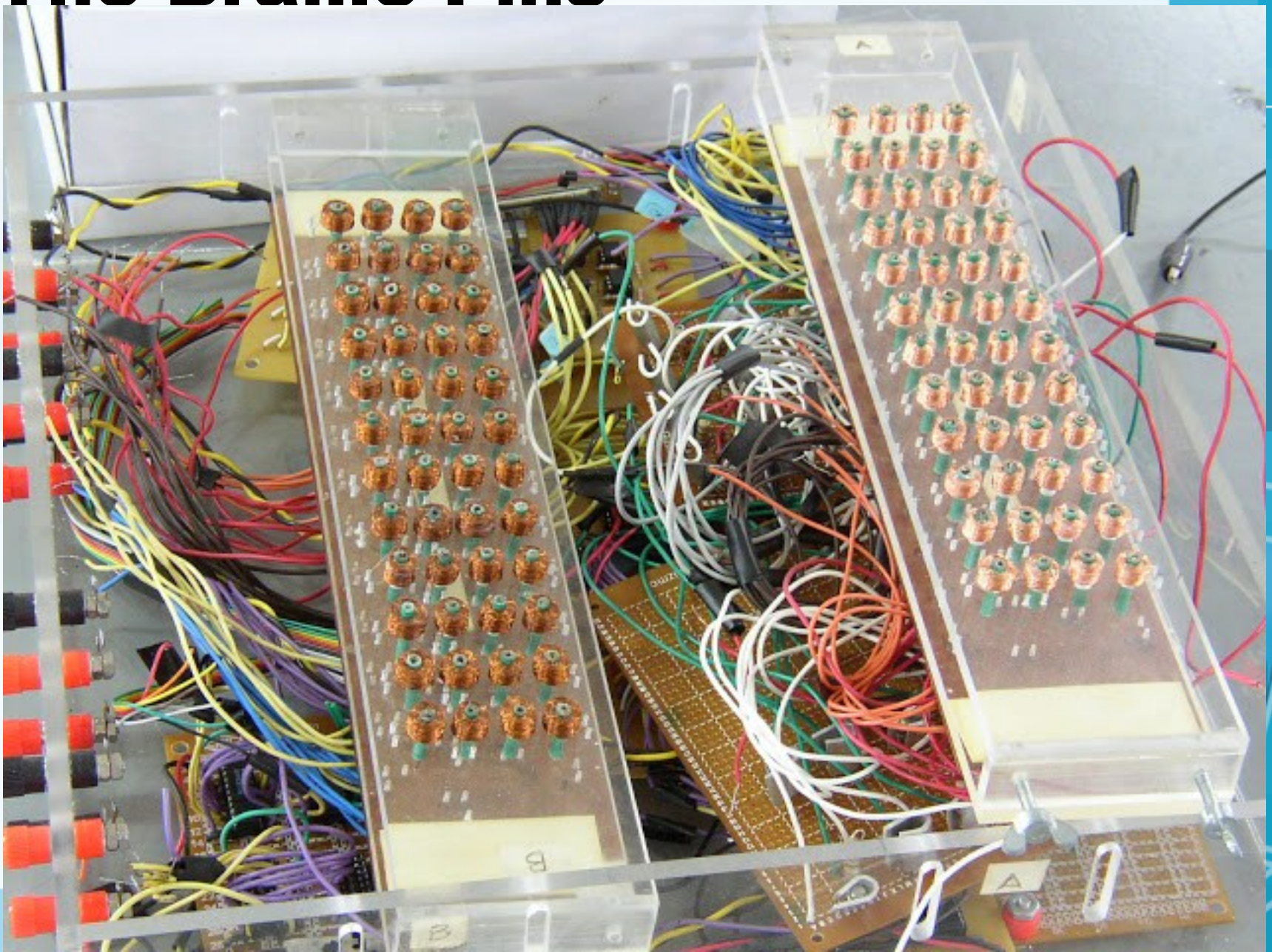


SAMSUNG

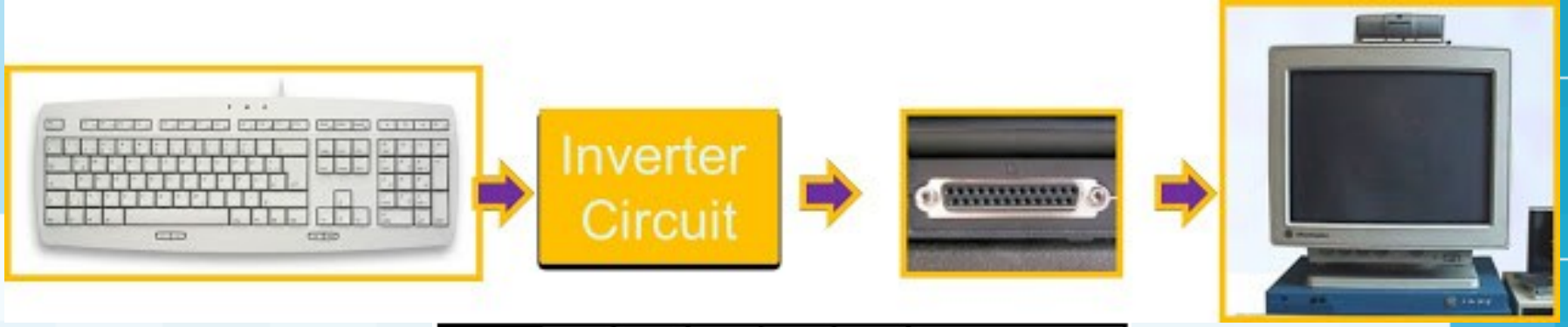

Pin	11	10	12	13	15	Reserved		
Func	S7	S6	S5	S4	S3	S2	S1	S0
Bit	0	0	1	0	0	X	X	X

Pin	Function	Color
1	Data	Red
2	Not Connected	--
3	Ground	White
4	Vcc	Green
5	Clock	Black
6	Not Connected	--